| Rev | AWO # | Description | Date | Appr |
|---|---|---|---|---|
| - | | RELEASED | 6/24/16 | |

APPROVED: _____

DATE: _____ TITLE: _____

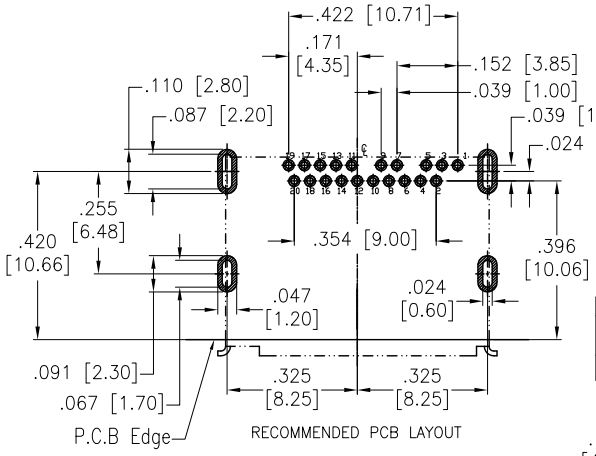


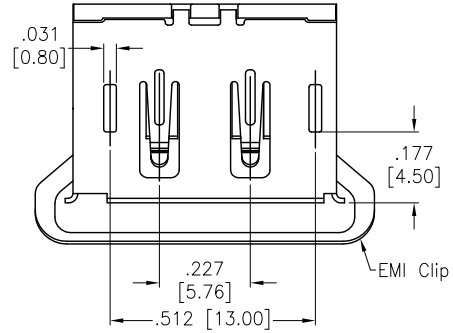


| Pin No. | Signal Type | Pin No. | Signal Type |
|---|---|---|---|
| 1 | In | 11 | GND |
| 2 | GND | 12 | In |
| 3 | In | 13 | CONFIG(see note 1) |
| 4 | In | 14 | CONFIG(see note 1) |
| 5 | GND | 15 | I/O |
| 6 | In | 16 | GND |
| 7 | In | 17 | I/O |
| 8 | GND | 18 | Out |
| 9 | In | 19 | RTN |
| 10 | In | 20 | Power Out(see note 2) |

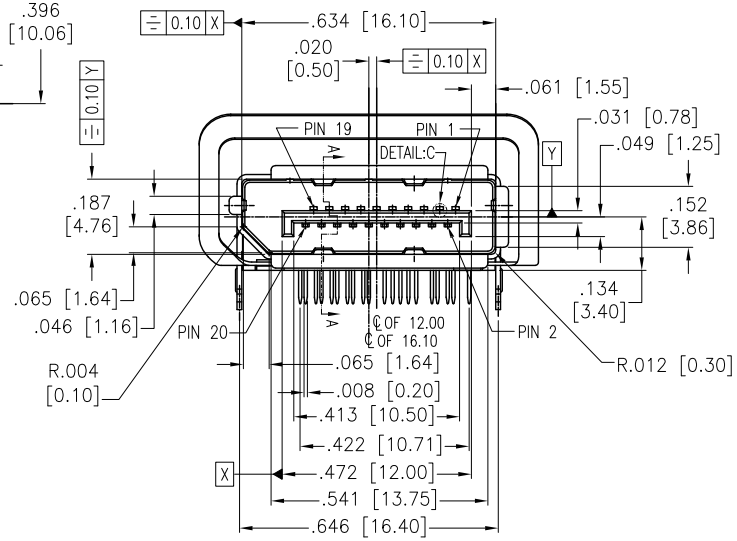


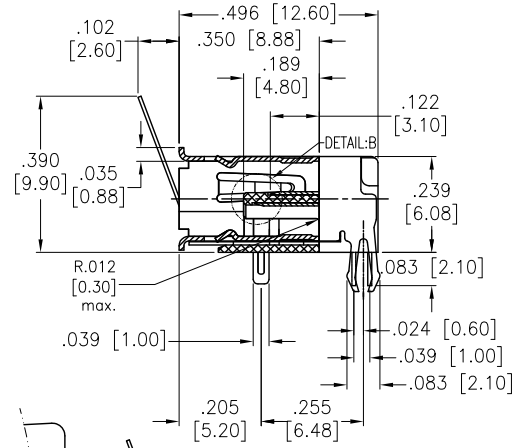


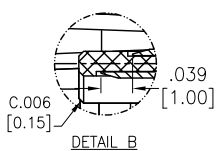


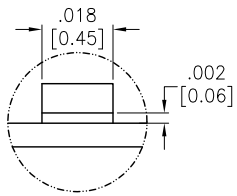


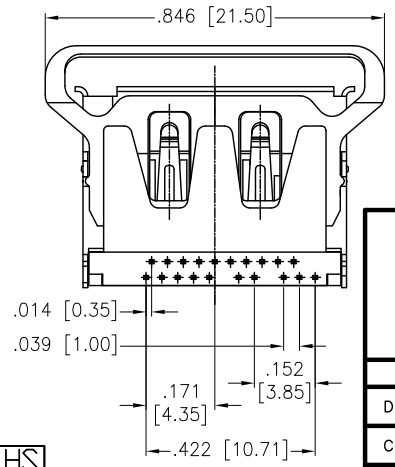


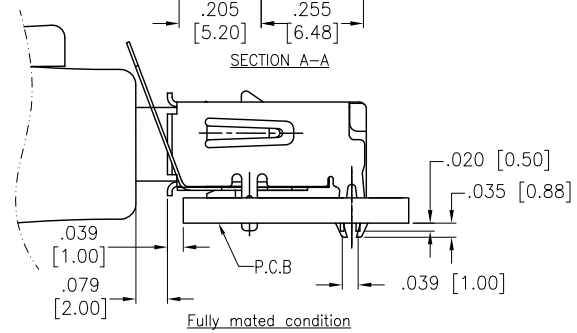


SPECIFICATIONS:

Material:

Housing: Hi–temp thermoplastic, rated UL 94V–0

Contact: Brass

Shell: Brass, Nickel plated

Plating:

15u" Gold over Nickel underplate on contact area,

Tin over Nickel underplate on solder tails

Electrical:

Operating voltage: 40 VAC max

Current rating: 0.5 Amps per Contact

Conatct Resistance: 30 mohms max

Insulation Resistance: 100 Mohms min.

Withstanding Voltage: 500 VAC for 1 minute

Temperature Rating:

Operating temperature: –20°C to +85°C

Environmetal:

Lead free, RoHS compliant.

RoHS COMPLIANT

UNLESS OTHERWISE SPECIFIED
ALL DIMENSIONS ARE INCHES [MM]
TOLERANCES: EXCEPT AS NOTED

| INCHES | | HOLES | |
|---|---|---|---|
| .X | ± .10 | Ø.X | ±.10 |
| .XX | ± .020 | Ø.XX | ±.015 |
| .XXX | ± .015 | Ø.XXX | ±.010 |

| APPROVALS | | DATE |
|---|---|---|
| DRAWN | AY | 6/24/16 |
| CHECKED | CH | 6/24/16 |
| APPROVED | | |

METABEE

TITLE

DISPLAYPORT RECEPTACLE, R/A, W/EMI CLIP, DIP 20 PIN, W/ BOARDLOCK, 15u" SEL GOLD PLATED

| SIZE | PART NO. | REV. |
|---|---|---|
| X | DPC-F-S-RA-CS2-BL-15-EMI | - |

REF: S00078T | SCALE: NTS | SHEET 1 OF 1