Rev	AWO #	Description	Date	Appr
-		RELEASED	7/19/11	
A		UPDATED DRAWING	12/5/17	HR/IC
B		UPDATED DIM. & ADDED LAYOUT	7/10/18	HR/RC1
C		UPDATED DIM	10/14/20	AY/LL1

APPROVED: _____

DATE: _____ TITLE: _____

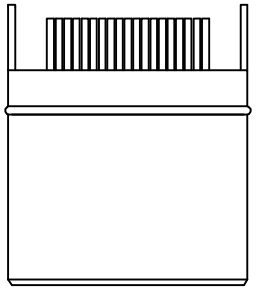

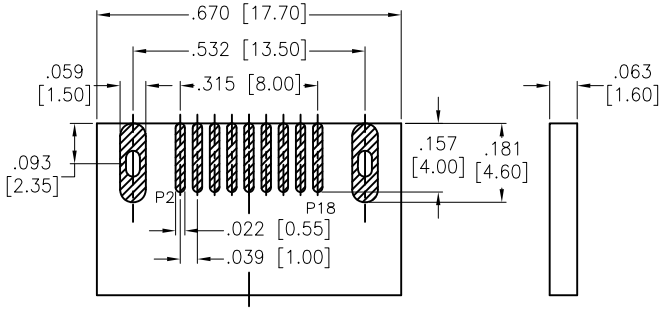

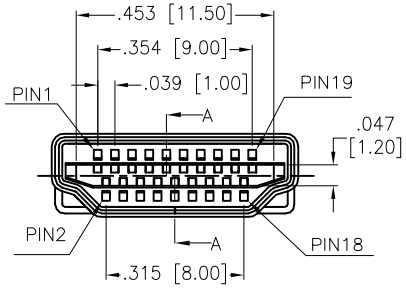

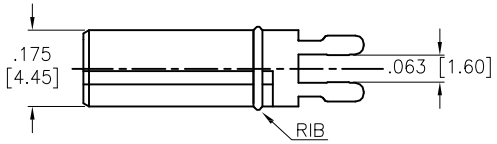

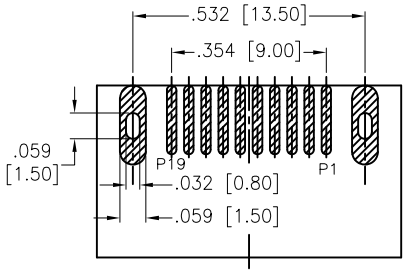

RECOMMENDED PCB LAYOUT

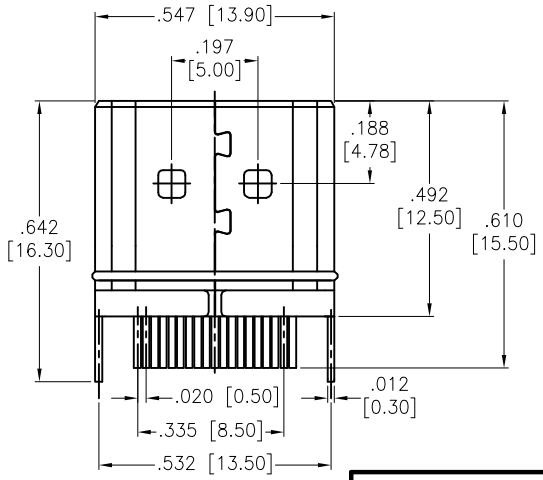

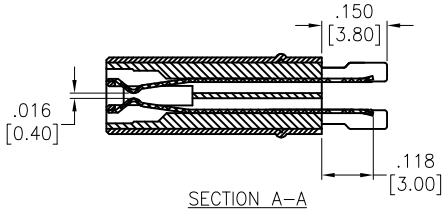

SECTION A–A

SPECIFICATIONS:
Material:
Insulator: Hi–Temp Thermoplastic, rated UL94V–0
Insulator color: Black
Contact: Phosphor Bronze
Shell: SPCC, Nickel plated
Plating:
Gold flash over Nickel underplate on contact area,
Tin over Nickel underplate on solder tails
Electrical:
Voltage rating: 40 VAC(rms)
Current rating: 0.5 A min
LLCR: 50 mohms max
Insulation resistance: 100 Mohms min
Dielectric withstanding voltage: 500 VAC for 1 minute
Temperature Rating:
Operating temperature: –25°C to +85°C
Environmental:
Lead free, RoHS Compliant

RoHS COMPLIANT

UNLESS OTHERWISE SPECIFIED
ALL DIMENSIONS ARE INCHES [MM]
TOLERANCES: EXCEPT AS NOTED

INCHES		HOLES	
.X	± .10	Ø.X	±.10
.XX	± .020	Ø.XX	±.015
.XXX	± .015	Ø.XXX	±.010

APPROVALS		DATE
DRAWN	AY	7/19/11
CHECKED	AH	7/19/11
APPROVED		

METABEE
Metabee (Chengdu) Technology Co., Ltd.
Tel: +8615926241606 E-mail: Sales@metabeeai.com

TITLE
HDMI MALE CONNECTOR, STRADDLE MOUNT OVER MOLDING TYPE

SIZE	PART NO.	REV.
X	HDMI-PLUG-OM3	C

REF: S00106T | SCALE: NTS | SHEET 1 OF 1