Rev	AWO #	Description	Date	Appr
-		RELEASED	10/4/16	

APPROVED: _____

DATE: _____ TITLE: _____

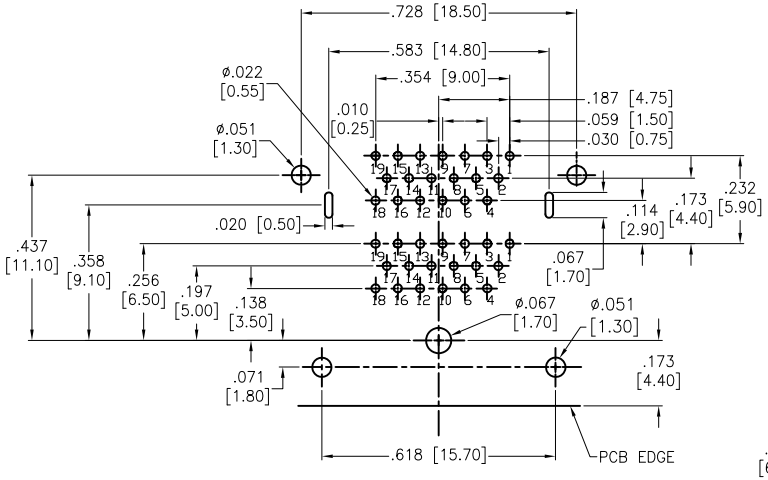

RECOMMENDED PCB LAYOUT

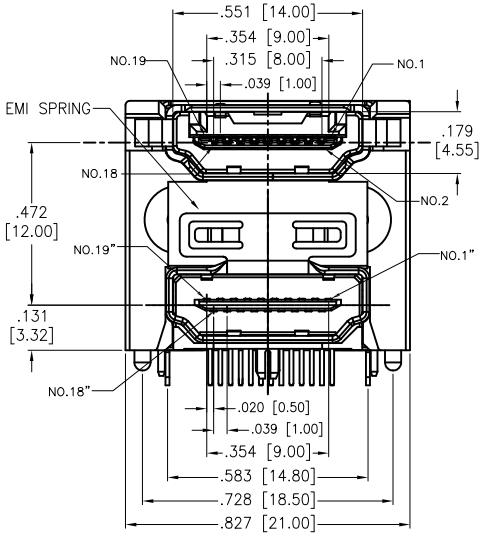

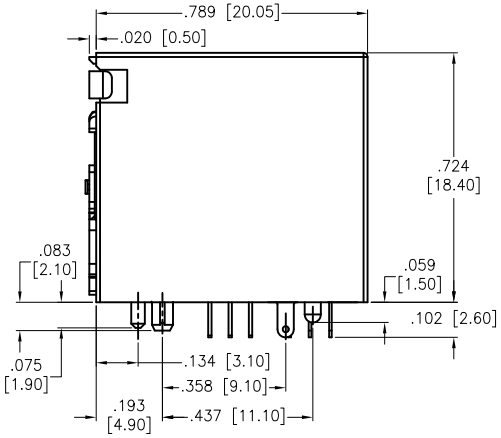

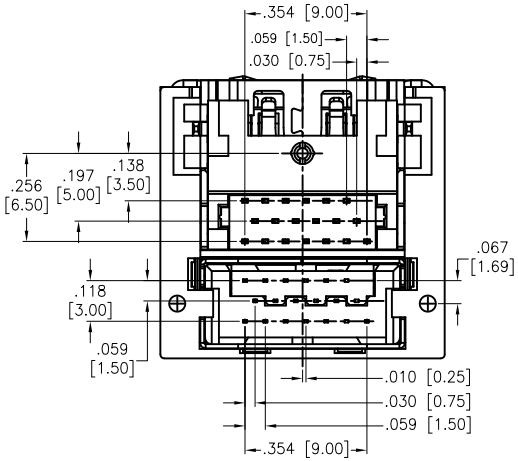

SPECIFICATIONS:
Material:
Insulator: Hi–Temp Thermoplastic, rated UL 94V–0
Insulator color: Black
Contacts: Copper Alloy
Plating:
Gold flash over Nickel underplate on contact area,
Matte Tin over Nickel underplate on PCB tails
Electrical:
Operating Current: 0.5 A max
Insulation resistance: 100 Mohms min (Unmate) / 10 Mohms min (Mate)
Dielectric withstanding voltage: 500 VAC (Unmate) / 300 VAC (Mate)
Temperature Rating:
Operating temperature: –25°C to +85°C
Environmental:
Lead free, RoHS compliant

RoHS COMPLIANT

UNLESS OTHERWISE SPECIFIED
ALL DIMENSIONS ARE INCHES [MM]
TOLERANCES: EXCEPT AS NOTED

INCHES		HOLES	
.X	± .10	Ø.X	±.10
.XX	± .020	Ø.XX	±.015
.XXX	± .015	Ø.XXX	±.010

APPROVALS		DATE
DRAWN	HR	10/4/16
CHECKED	CH	10/4/16
APPROVED		

Metabee (Chengdu) Technology Co., Ltd.
Tel: +8615926241606 E-mail: Sales@metabeeai.com

TITLE

DUAL HDMI CONNECTOR

SIZE	PART NO.	REV.
X	HDMI-D-RA-1B	-

REF: S00106T | SCALE: NTS | SHEET 1 OF 1