Rev	AWO #	Description	Date	Appr
-		RELEASED	9/30/24	

APPROVED: _____

DATE: _____ TITLE: _____

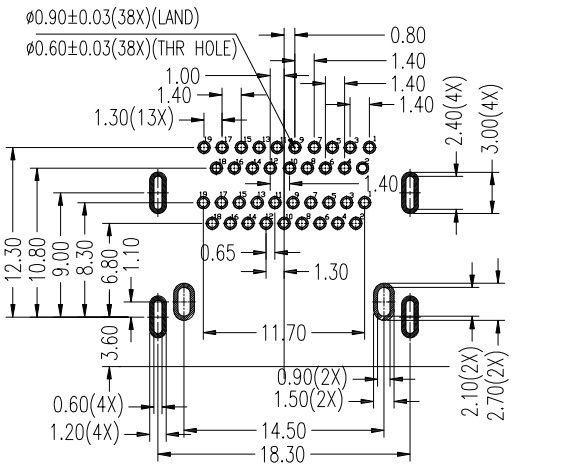

RECOMMENDED P.C.B. LAYOUT(BOTTOM VIEW)

TOL IS ±0.05 THICKNESS=1.2 ALL POSITION TOL ⊕ 0.06 X Y

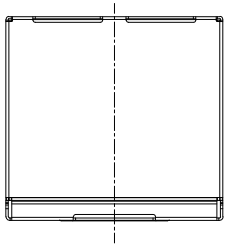

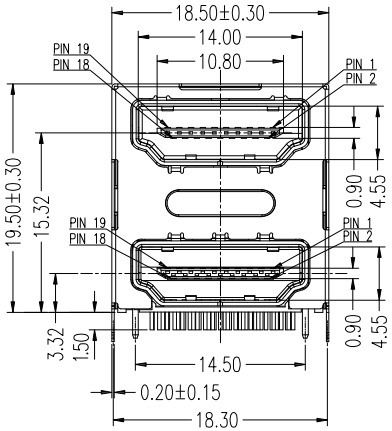

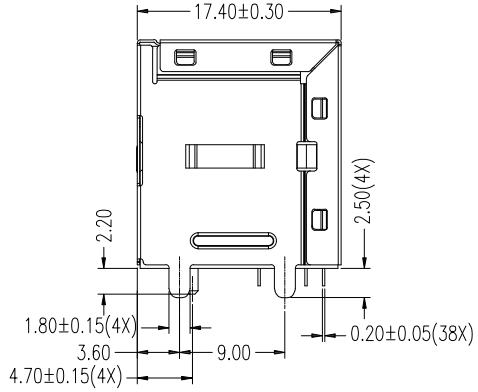

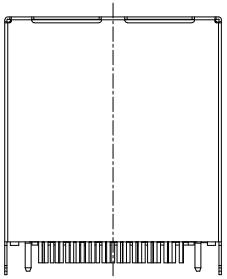

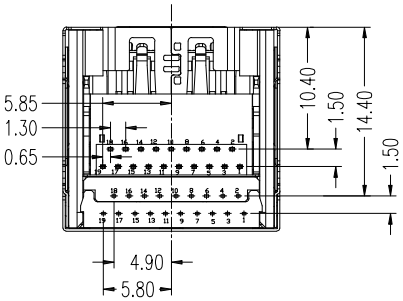

SPECIFICATIONS:

Material:

Housing: (LCP) Hi-Temp Thermoplastic, rated UL 94V-0, Color: Black

Terminal: Brass

Shell (Upper): Brass, Nickel plated

Shell (HDMI): Brass, Nickel plated

Shield (Back): Stainlees Steel, Nickel Plated

Shield (Front): Stainlees Steel, Nickel Plated

Plating:

Gold Flash over Nickel underplate on contact area

Tin over Nickel underplate on solder tails

Electrical:

Voltage rating: 40V AC (RMS) Max

Current rating: 0.5 Ampere Per Contact

Contact resistance: 30mΩ

Insulation resistance: 100 Mohms

Dielectric withstanding voltage: Unmated : 500 Volts AC

Mated : 300 Volts AC

Mechanical:

Insertion force: 4.5Kgf Max.

Withdrawal force: 1.0Kgf Min

Temperature Rating:

Operating temperature: -25°C to +85°C

Environmental:

Lead free, RoHS compliant

RoHS COMPLIANT

Deca BDE-free Halogen-free

PIN ASSIGNMENTS

PIN NO.	SIGNAL NAME	PIN NO.	SIGNAL NAME
P1(P1')	TMDS DATA2+	P2(P2')	TMDS DATA2 SHIELD
P3(P3')	TMDS DATA2-	P4(P4')	TMDS DATA1+
P5(P5')	TMDS DATA1 SHIELD	P6(P6')	TMDS DATA1-
P7(P7')	TMDS DATA0+	P8(P8')	TMDS DATA0 SHIELD
P9(P9')	TMDS DATA0-	P10(P10')	TMDS CLOCK+
P11(P11')	TMDS CLOCK SHIELD	P12(P12')	TMDS CLOCK-
P13(P13')	CEC	P14(P14')	RESERVED(N.C. ON DEVICE)
P15(P15')	SCL	P16(P16')	SDA
P17(P17')	DDC/CEC GROUND	P18(P18')	+5V POWER
P19(P19')	HOT PLUG DETECT		

UNLESS OTHERWISE SPECIFIED ALL DIMENSIONS ARE MILLIMTERS. TOLERANCES: EXCEPT AS NOTED

	MM	ANGLE
.X	± 0.38	± 3°
.XX	± 0.25	
.XXX	± 0.20	

DRAWN	LH	9/30/24
CHECKED	JL	9/30/24
APPROVED		

THIS DRAWING CONTAINS INFORMATION THAT IS PROPRIETARY AND SHOULD NOT BE USED WITHOUT PRIOR WRITTEN PERMISSION FROM METABEE

METABEE
Metabee (Chengdu) Technology Co., Ltd.
Tel: +8615926241606 E-mail: Sales@metabeeai.com

TITLE

DUAL PORT, HDMI 2.1 FEMALE 19P TOP, TO HDMI 2.1 FEMALE 19P BOTTOM,

SIZE	PART NO.	REV.
X	DPD-HDMI19S/HDMI19S-00-H-A-HF	-

REF: S00078T SCALE: NTS SHEET 1 OF 1