Rev	AWO #	Description	Date	Appr
-		RELEASED	12/19/13	
A		UPDATE DRAWING	4/11/16	AY/CH

APPROVED: _____

DATE: _____ TITLE: _____

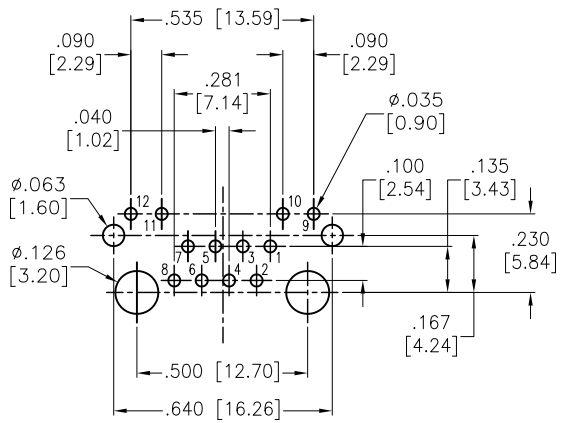

RECOMMENDED PCB LAYOUT

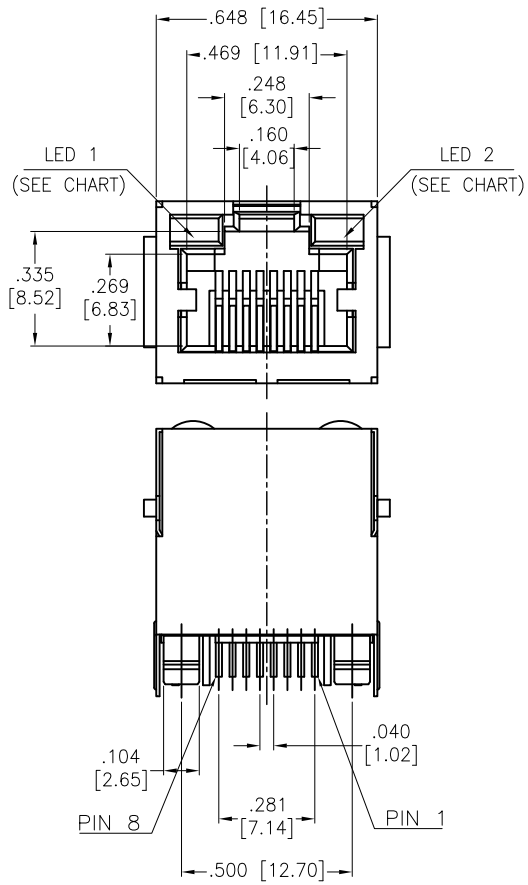

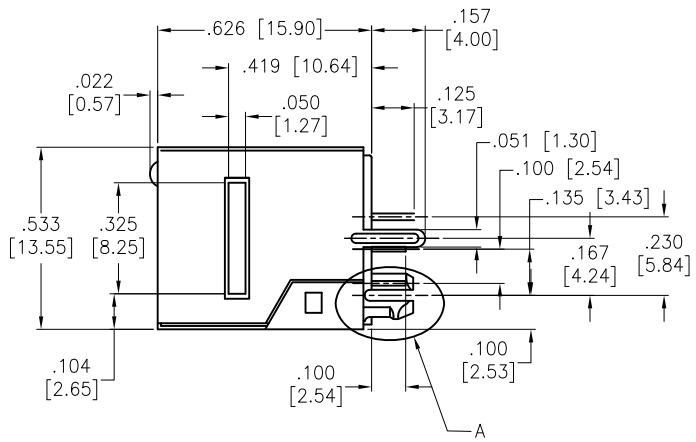

Part Number	LED 1 Color	LED 2 Color
MTJ-88DX1-FSQ-LD	Green	Green
MTJ-88DX1-FSQ-LG	Yellow	Green
MTJ-88DX1-FSQ-LH	Green	Yellow
MTJ-88DX1-FSQ-LP	Yellow/Green	Yellow/Green
MTJ-88DX1-FSQ-LV	Green	Yellow/Green
MTJ-88DX1-FSQ-L16	Green/Yellow	Green/Yellow

SPECIFICATIONS:

Material:

Insulator: PA46, Glass reinforced, rated UL 94V-0
Insulator color: Black
Contacts: Phosphor Bronze
Shell: Brass, Nickel Plated
LED solder tail: Steel, Tin plated

Plating:

Round contact
Gold over Nickel underplate overall
Flat contact
Gold over Nickel underplate on contact area,
Tin over Copper underplate on solder tails

Electrical:

Voltage rating: 150 VAC max
Current rating: 1.5 Amps max
Contact resistance: 20 mohms max
Insulation resistance: 500 Mohms min @ 500 VDC
Dielectric withstanding voltage: 1,500 VRMS for 1 minute

Temperature Rating:

Operating temperature: −40°C to +85°C

Environmental:

Lead free, RoHS compliant.

RoHS COMPLIANT

UNLESS OTHERWISE SPECIFIED
ALL DIMENSIONS ARE INCHES [MM]
TOLERANCES: EXCEPT AS NOTED

INCHES		HOLES	
.X	± .10	Ø.X	±.10
.XX	± .020	Ø.XX	±.015
.XXX	± .015	Ø.XXX	±.010

APPROVALS		DATE
DRAWN	HR	12/19/13
CHECKED	GC	12/19/13
APPROVED		

METABEE

TITLE: MODULAR TELEPHONE JACK, 8P8C, W/ LED'S

SIZE	PART NO.	REV.
X	MTJ-88DX1-FSQ-LX	A

REF: S00065T | SCALE: NTS | SHEET 1 OF 1