Rev	AWO #	Description	Date	Appr
-		RELEASED	12/14/16	
A		UPDATE INSULATOR COLOR	3/15/17	AY/YC

APPROVED: _____

DATE: _____ TITLE: _____

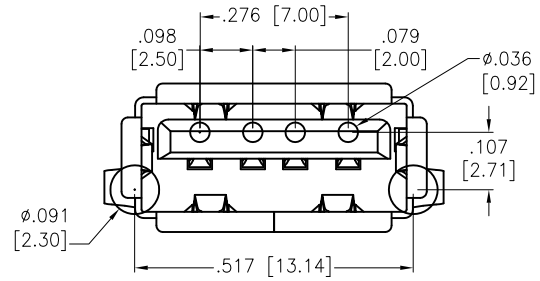

RECOMMENDED PCB LAYOUT

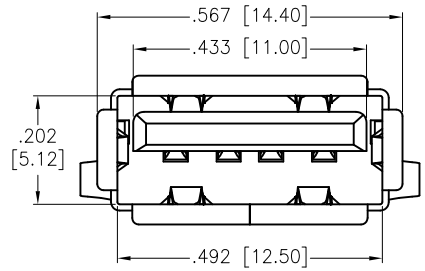

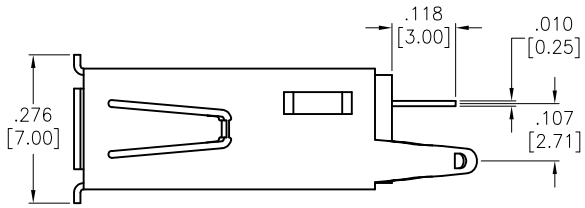

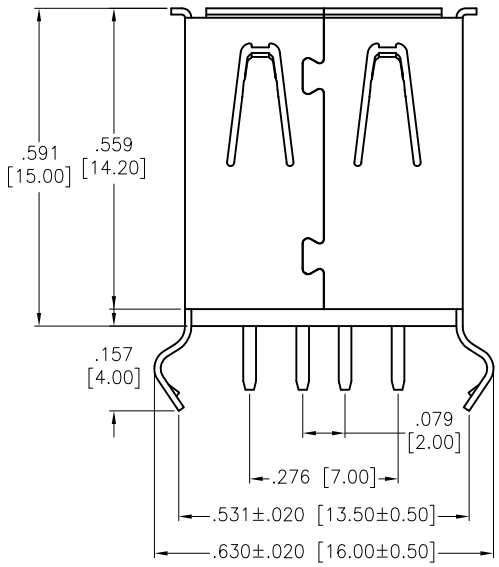

SPECIFICATIONS:
Material:
Insulator: PBT, rated UL 94V–0
Insulator color: White
Contacts: Brass
Shell: Brass, Nickel plated
Plating:
Gold flash over Nickel underplate on contact area,
Tin over Nickel underplate on tails.
Electrical:
Rated voltage & Current: 1A max
Contact resistance: 30 mohms max (Before life test)
50 mohms max (After life test)
Insulation resistance: 1,000 Mohms min @ 500 VDC
Dielectric withstanding voltage: 30 VDC for 1 minute
Temperature Rating:
Operating temperature: –55°C to +85°C
Environmental:
Lead free, RoHS compliant

RoHS COMPLIANT

UNLESS OTHERWISE SPECIFIED
ALL DIMENSIONS ARE INCHES [MM]
TOLERANCES: EXCEPT AS NOTED

INCHES		HOLES	
.X	± .10	Ø.X	±.10
.XX	± .020	Ø.XX	±.015
.XXX	± .015	Ø.XXX	±.010

APPROVALS		DATE
DRAWN	AY	12/14/16
CHECKED	VT	12/14/16
APPROVED		

METABEE

TITLE
UNIVERSAL SERIAL BUS 2.0, TYPE A
SINGLE PORT, VERTICAL MOUNT

SIZE X | PART NO. USB-A-S-VT-CS3 | REV. A

REF: S00217T | SCALE: NTS | SHEET 1 OF 1