APPROVED: _____

DATE: _____ TITLE: _____

Rev	AWO #	Description	Date	Appr
-		RELEASED	12/12/14	
A		UPDATED SHAPE	8/21/15	HR/WY
B		UPDATED SPEC.	6/16/16	HR/MW
C		CORRECTED PIN # DESIGNATORS	3/15/17	SS

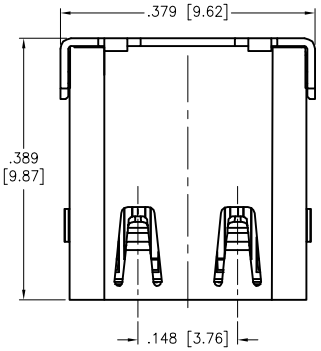

	A		B
1	GND	12	GND
2	TX1+	11	RX1+
3	TX1−	10	RX1−
4	VBUS	9	VBUS
5	CC1	8	SBU2
6	D+	7	D−
7	D−	6	D+
8	SBU1	5	CC2
9	VBUS	4	VBUS
10	RX2−	3	TX2−
11	RX2+	2	TX2+
12	GND	1	GND

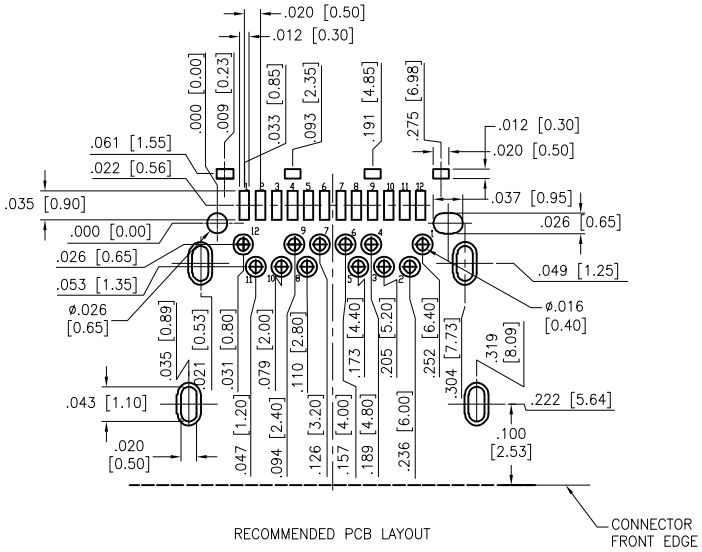

RECOMMENDED PCB LAYOUT

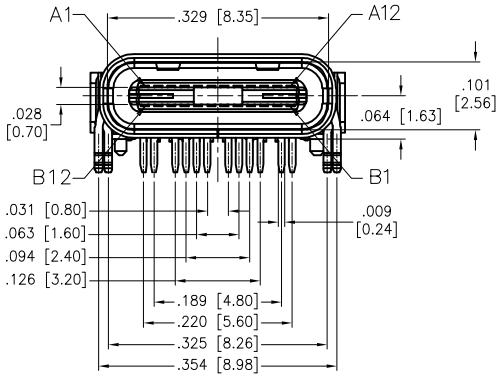

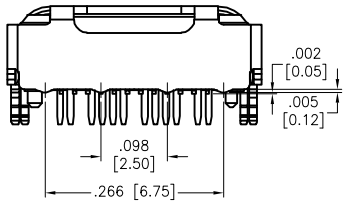

BACK VIEW

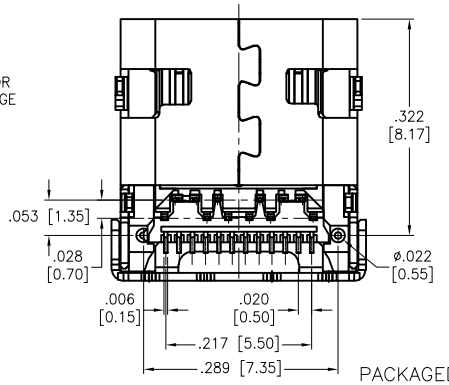

PACKAGED ON TAPE & REEL

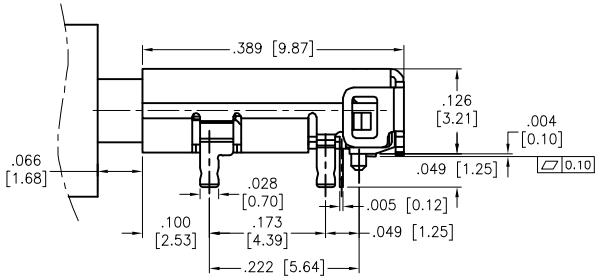

ASSEMBLY VIEW

SPECIFICATIONS:

Material:
Insulator: Hi−temp thermoplastic, rated UL 94V−0
Insulator color: Black
Contacts: Phosphor Bronze
Shell: Copper Alloy

Plating:
Gold flash over Nickel underplate on contact area,
Tin over Copper underplate on solder tails.

Electrical:
Operating voltage: 5 V
Voltage rating: 30 VAC RMS
Contact resistance: 40 mohms max
Insulation resistance: 100 Mohms min
Dielectric withstanding: 100 VAC for 1 minute

Mechanical:
Insertion force: 5N~20N
Withdrawal force: 8N~20N
After 10,000 cycles Mating: 2N Min

Temperature Rating:
Operating temperature: −25°C to +85°C

Environmental:
Lead free, RoHS compliant.

RoHS COMPLIANT

UNLESS OTHERWISE SPECIFIED
ALL DIMENSIONS ARE INCHES [MM]
TOLERANCES: EXCEPT AS NOTED

INCHES		HOLES	
.X	± .10	Ø.X	±.10
.XX	± .020	Ø.XX	±.015
.XXX	± .015	Ø.XXX	±.010

APPROVALS		DATE
DRAWN	AY	12/12/14
CHECKED	TW	12/12/14
APPROVED		

METABEE

TITLE: UNIVERSAL SERIAL BUS, TYPE C, FEMALE, RIGHT ANGLE, BLACK INSULATOR, TAPE & REEL

SIZE: X | PART NO.: USB-C31-S-RA-BK-T/R | REV.: C

REF: S00097C | SCALE: NTS | SHEET 1 OF 1