Rev	AWO #	Description	Date	Appr
-		RELEASED	3/13/20	

APPROVED: _____

DATE: _____ TITLE: _____

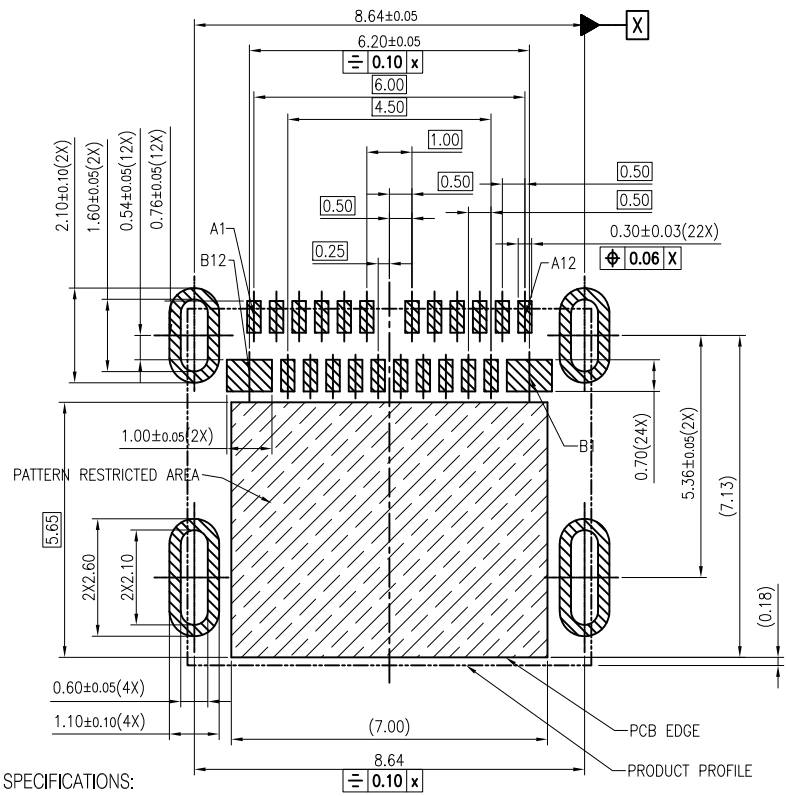

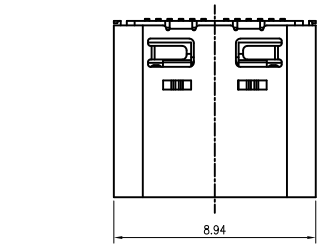

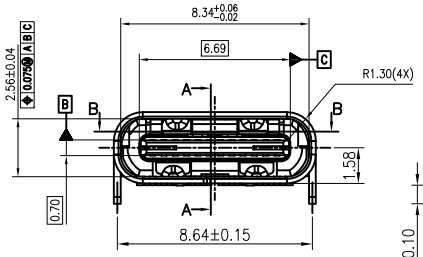

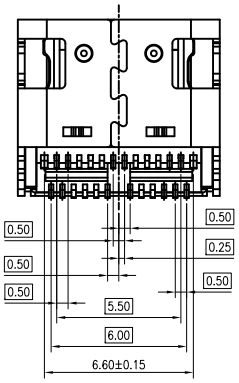

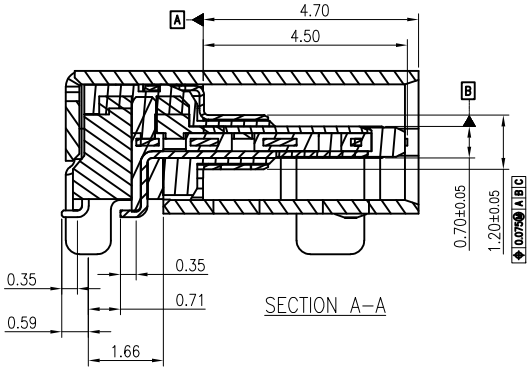

SECTION A–A

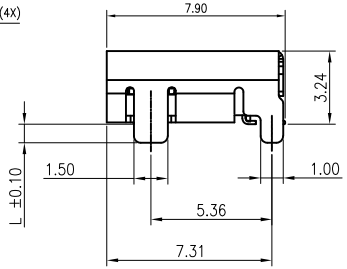

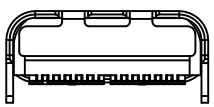

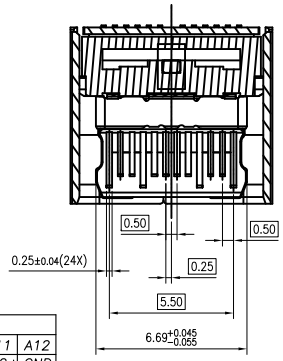

SECTION B–B

PIN ASSIGNMENT											
A1	A2	A3	A4	A5	A6	A7	A8	A9	A10	A11	A12
GND	TX1+	TX1−	VBUS	CC1	D+	D−	SBU1	VBUS	RX2−	RX2+	GND
GND	RX1+	RX1−	VBUS	SBU2	D−	D+	CC2	VBUS	TX2−	TX2+	GND
B12	B11	B10	B9	B8	B7	B6	B5	B4	B3	B2	B1

SPECIFICATIONS:

Material:

Insulator: Hi–Temp Thermoplastic, rated UL 94V–0

Insulator color: Black

Contacts: Copper Alloy

EMI Spring: Stainless Steel

Front Shell: Stainless Steel, Nickel plated

Middle Blade: Stainless Steel, Nickel plated,

Tin over Nickel underplate on solder area

Plating:

30u" Gold over Nickel underplate on contact area

Gold Flash over Nickel underplate on solder tails

Electrical:

Voltage rating: 5V

Current rating: 5A

LLCR: VBUS&GND and Other Pin: 40mΩ/Pin max

Shield: 50mΩ/max

LLCR Mxa. Change of All Pins: 10mΩ

Insulation resistance: 100 Mohms min

Dielectric withstanding voltage: 100 VAC For 1 Minute

Temperature Rating:

Operating temperature: −25°C to +85°C

Environmental:

Lead free, RoHS compliant

RoHS COMPLIANT

PACKAGED ON TAPE & REEL

UNLESS OTHERWISE SPECIFIED
ALL DIMENSIONS ARE MILLIMETERS
TOLERANCES: EXCEPT AS NOTED

MM		ANGLE	
X.X	± 0.38	X.	±5°
X.XX	± 0.25	X.X	±2°
X.XXX	± 0.10	X.XX	±1°

APPROVALS		DATE
DRAWN	LH	3/13/20
CHECKED	LW	3/13/20
APPROVED		

METABEE

TITLE: UNIVERSAL SERIAL BUS, TYPE C, FEMALE, RIGHT ANGLE, BLACK INSULATOR

SIZE	PART NO.	REV.
X	USB-C31-S-RA-CS10A-SMT-BK-30-T/R	-

REF: S00181C | SCALE: NTS | SHEET 1 OF 1